COOPER POWER
SERIES

NOVAi; Three-phase, six voltage sensors, microprocessor-controlled reclosers (S280-43A)

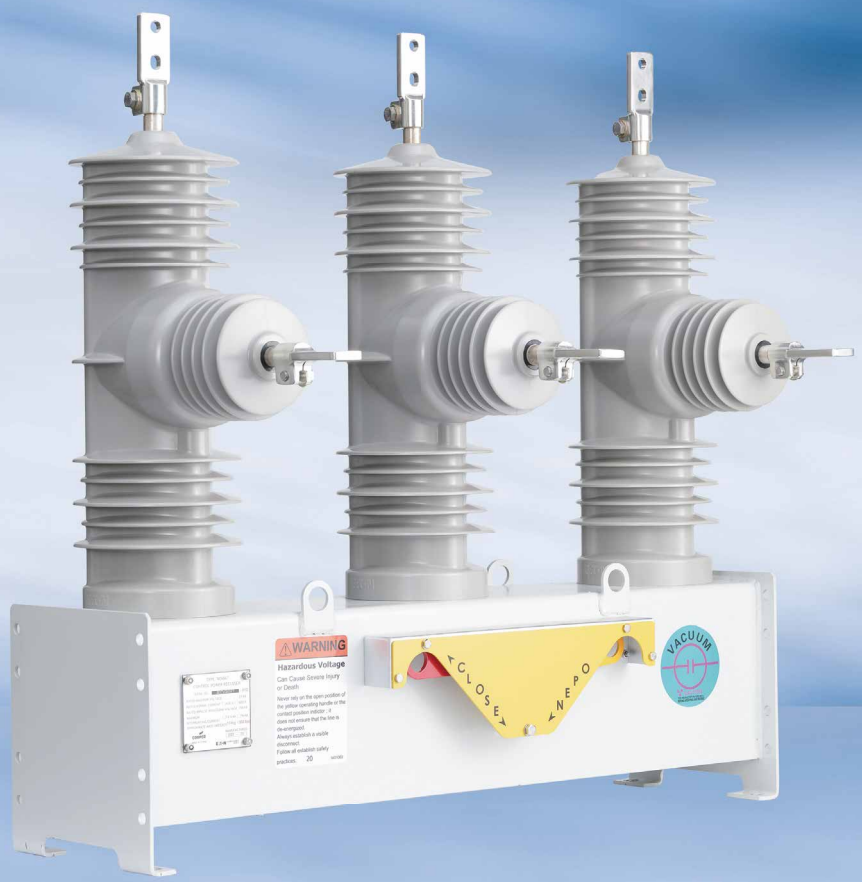

EATON
Powering Business Worldwide

COOPER

Powering business worldwide

Eaton delivers the power inside hundreds of products that are answering the demands of today's fast changing world.

We help our customers worldwide manage the power they need for buildings, aircraft, trucks, cars, machinery and entire businesses. And we do it in a way that consumes fewer resources.

Next generation transportation

Eaton is driving the development of new technologies – from hybrid drivetrains and emission control systems to advanced engine components – that reduce fuel consumption and emissions in trucks and cars.

Higher expectations

We continue to expand our aerospace solutions and services to meet the needs of new aviation platforms, including the high-flying light jet and very light jet markets.

Building on our strengths

Our hydraulics business combines localised service and support with an innovative portfolio offluid power solutions to answer the needs of global infrastructure projects, including locks, canals and dams.

Powering Greener Buildings and Businesses

Eaton's Electrical Group is a leading provider of power quality, distribution and control solutions that increase energy efficiency and improve power quality, safety and reliability. Our solutions offer a growing portfolio of "green" products and services, such as energy audits and real-time energy consumption monitoring. Eaton's Uninterruptible Power Supplies (UPS), variable-speed drives and lighting controls help conserve energy and increase efficiency.

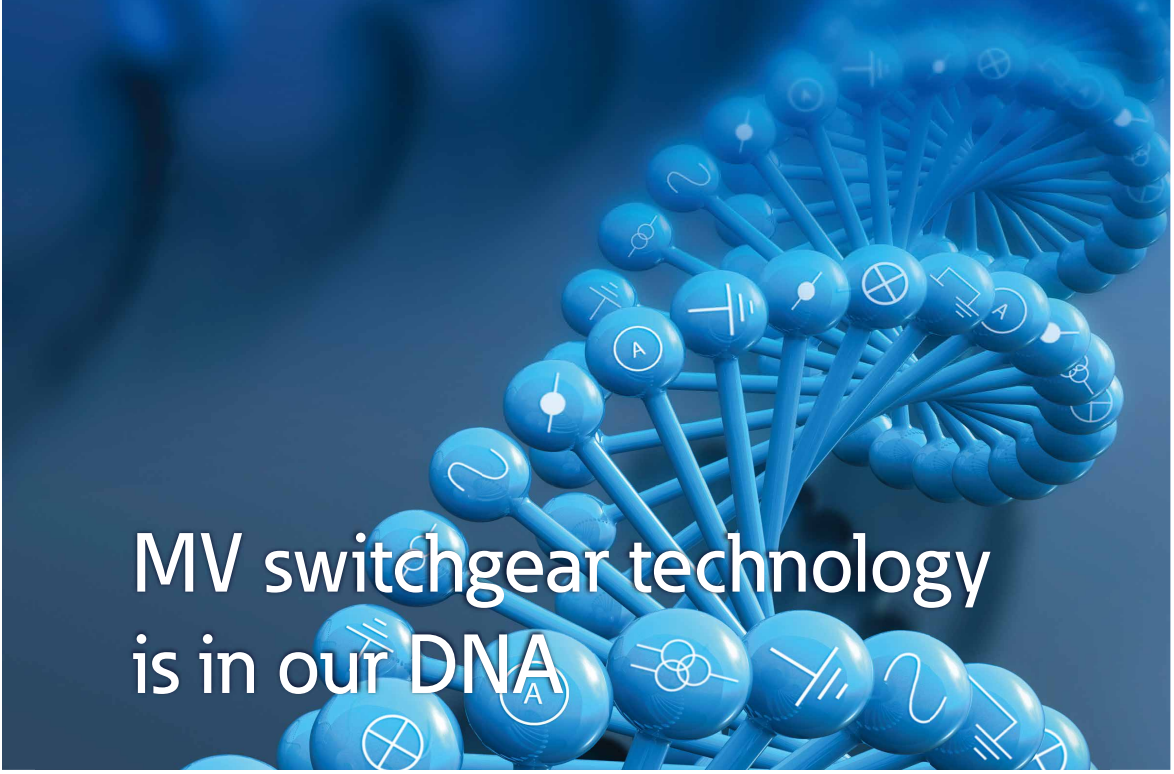

MV switchgear technology is in our DNA

Eaton Corporation is a worldwide leader in the design, manufacture, and sale of safe, reliable and high-performance medium voltage power distribution equipment in accordance with IEC, ANSI and GB / DL standards

Complete Global Medium Voltage Switchgear Solutions

Eaton, a premier leader in designing and manufacturing power distribution and protection equipment in the electrical industry, offers a comprehensive range of medium voltage (MV) solutions to meet the needs of virtually every application. From products that feature cutting-edge design that allow for easy access, maintenance and space savings, to arc-resistant products that enhance safety, Eaton's medium voltage solutions provide a variety of products for every need. Additionally, Eaton's global service network provides maximum customer support in all regions of the world.

As one of the few completely vertically integrated and diversified industrial manufacturers in the world, Eaton designs not only MV assemblies, but also the key components that comprise the MV solutions – from steel housing and circuitbreaker compartments to vacuum interrupters, circuit breakers, bus systems and fuses.

Eaton's MV heritage, strengthened by acquisitions such as Westinghouse DCBU, Cutler Hammer, MEM and Holec, has resulted in breakthrough MV technologies and numerous international patents over the years.

Part of Eaton's complete electrical PowerChain Solutions – which help businesses minimize risks while realizing greater reliability, cost efficiencies, capital utilization and safety – Eaton's medium voltage equipment meets all applicable standards and certifications such as IEC, NEMA / ANSI, GB / DL, UL, IEEE, KEMA and CSA.

When it comes to medium voltage solutions, you can trust the one name with a long history of proven performance: Eaton.

NOVAi, three-phase, six voltage sensors, microprocessor-controlled reclosers (S280-43A)

Contents

1. GENERAL 4

2. FEATURES 4

3. TEHNICAL PARAMETERS 5

4. STRUCTURE AND FUNCTIONS 6

5. CONTROL UNIT 9

6. OUTLINE DRAWING 11

7. ORDERING GUIDE 13

1. General

General

The NOVAi three-phase, six internal voltage sensors, microprocessor controlled, vacuum-interrupting automatic reclosers provide advanced system protection, metering, and data acquisition with full integration and automation functionality for power distribution systems.

The NOVAi recloser combines solid cycloaliphatic-epoxy polymer-encapsulated vacuum interrupters with a reliable, lightweight operating mechanism that utilizes a magnetic actuator to provide a lifetime of maintenance-free operation. The solid polymer system does not rely on a gaseous, liquid, or foam dielectric. The NOVAi recloser is highly resistant to ozone, oxygen, moisture, contamination, and ultraviolet light.

Designed and tested to be compatible with the Eaton's Cooper Power Systems FXD control, these automatic circuit reclosers offer superior coordination, protection, and application capabilities.

Recloser operations are programmed in an electronic control with accurate characteristics and a host of advanced features. Precise operating tolerances enable close coordination with other protective devices on the system. When system requirements change, program settings are easily altered with no sacrifice of accuracy or consistency.

Compact and lightweight, NOVAi reclosers are easily installed on poles or in substations. Mounting equipment is available for both pole and substation applications. Recloser and control accessories enable further tailoring of the protective program to achieve maximum system operating flexibility.

Eaton's Cooper Power Systems is strongly committed to improving the reliability of the electric power industry. Technological advances, including the newest microprocessor-based controls and solid insulation NOVAi distribution switchgear products, represent our investment in the future.

The NOVAi recloser is not only a technological breakthrough, but a valuable component that brings significant operational savings to the utility business unit, lowering the installation, operation, training, and maintenance costs on your power distribution system.

When needed, application expertise, backed by world-wide systems engineering knowledge and experience, is available. Customer focused design capability, based on more than 70 years of recloser experience, has made Eaton's Cooper Power Systems an industry leader.

NOVAi reclosers with six internal voltage sensors are designed and manufactured in accordance with the latest IEC62271-111/ANSI C37.60 2019 standard.

Standard

- IEC 62271-111/ANSI C37.60 2019 High-voltage switchgear and controlgear – part 111: Automatic circuit reclosers and fault interrupters for alternating current systems up to 38kV
- IEC62271-1 High-voltage switchgear and controlgear - Part 1: Common specifications
- IEC 62271-103 High-voltage switchgear and controlgear - Part 103 Switches for rated voltages above 1 kV up to and including 52 kV
- IEC60060-1 High-voltage Test Techniques - Part 1: General definitions and test requirements
- IEC 60815 Selection and dimensioning of high-voltage insulators intended for use in polluted conditions.
- IEC 60270 High-voltage test techniques – Partial discharge measurements
- IEC60529 Degrees of protection provided by enclosures (IP Code)

2. Features

- Advanced outdoor solid dielectric material
- Vacuum interrupter
- Six internal voltage sensors at both source and load sides
- Embedded current transformer
- Permanent magnetic actuator
- Manual open and close
- Dual CPU based smart control
- 37 Pin control cable

3. Technical parameters

Operation Condition

Ambient air temperature: Max 65°C, Min -40°C
Altitude: ≤1000m
Relative humidity: ≤100%
Wind speed: ≤34m/s
Solar radiation: ≤1000W/m^2

Parameters

Item		Unit	Parameter	
Model			NOVAi27	NOVAi38
Current Sensing			3 x Current Transformers	
Voltage Sensing			6 x Voltage Sensors	
Rated voltage		kV	27	38
Rated current		A	800	
Rated frequency		Hz	50/60	
Rated short-circuit breaking current		kA	16	
Rated short-circuit making current		kA	41.6	
Rated short-time withstand current		kA/s	16/3	
Power frequency withstand voltage /1min	Dry	kV	60	70
	Wet	kV	60	
Lightning impulse withstand voltage		kV	150	170(200 optional)
Cable Charging		A	25	40
Line Charging		A	5	
Rated operation sequence			O-0.3s-CO-1.8s-CO-1.8s-CO	
Mechanical life		times	10000	
Manual Operation	Open & Close		Available	Manual Open
	Making Operation	times	5 times @ 41.6kA	NA
IP			IP54	
Creepage distance		mm	837	1320

4. Structure and functions

E-CAP

- Advanced outdoor solid dielectric material
- Solid epoxy polymer encapsulated bushing complied creepage / leakage distance requirement with reliable outdoor performance
- Embedded vacuum interrupter
- Internal CT, 5P20 (Ratio: 1000:1)
- Internal Voltage Sensors for both source and load sides

Mechanism

- Permanent magnetic actuator could dependably operate 10,000 times with minimal moving parts, and the energizing capacitors located in FXD control.
- Manual open and close mechanism supports manual operations without control and could close fault current to insure safe operation.

5. Cortrol unit

The FXD recloser control offers advanced protection, monitoring and communication function for distribution automation needs. It contains modular components for easy maintenance.

Local Human Machine Interface

- Large LCD (160mm x 160mm)，10 lines and 20 characters for each line
- User friendly navigation Buttons: Up, Down, Right, Left, ENTER, EDIT, ESC, RESET and LAMP TEST
- 25 LED Status Indicators:
  - Phase/Earth/SEF Fault, Voltage/Frequency Trip and Above Min Trip status;
  - Reclosing status of Ready, Cycle and Lockout.
  - System operation healthy status of Self Check, AC Power, Battery Low and Com Status
  - Voltage energizing status for source side and load side of the Recloser
  - 4 programmable indicators

- 2 Operation Buttons: Trip and Close with LED indication
- 12 shortcut Buttons:
  - HOT LINE TAG
  - REMOTE ENABLED
  - RECLOSING BLOCKED
  - BATTERY TEST
  - OC BLOCKED
  - EF. BLOCKED
  - S.E.F. BLOCKED
  - ALT PROFILE
  - OPTION #1
  - OPTION #2
  - OPTION #3
  - AUTHORIZATION
- Front RJ45 & USB engineering port

Modular Design

- Control cube support plug & play and IO expansion
- Capacitor housing
- Power supply module
- Battery
- MCB and Surge Protection Device
- Hygrostat-controlled heaters
- 37pin receptacle and wiring

NOVAi, three-phase, six voltage sensors, microprocessor-controlled reclosers (S280-43A)

Cortrol unit

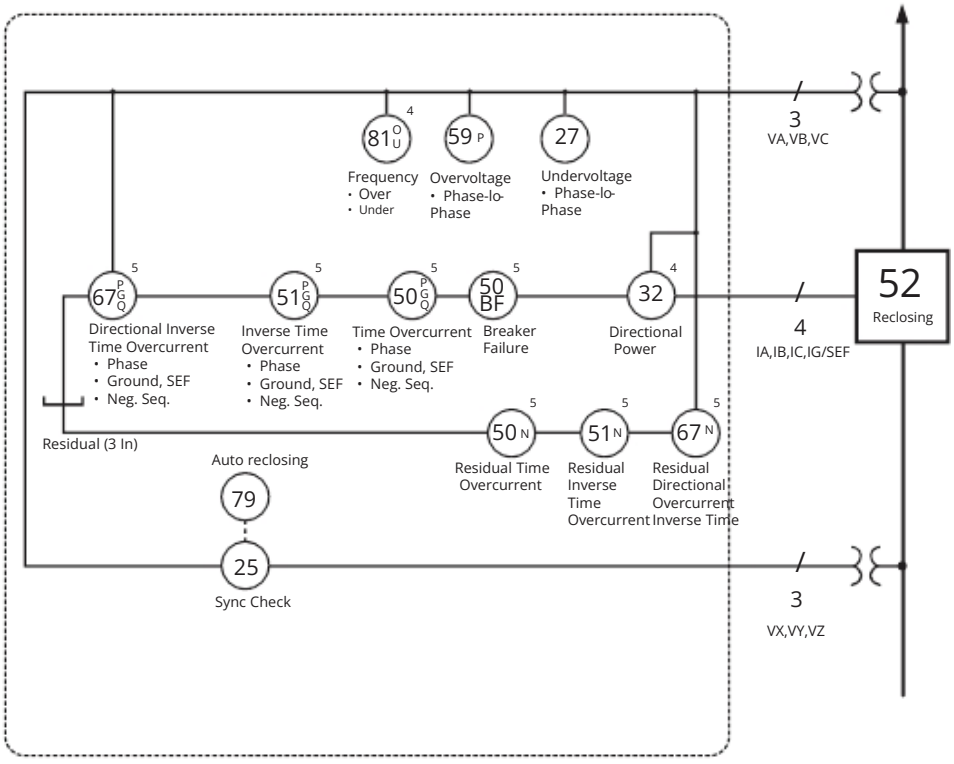

Metering / Monitoring functions

- Operational measured values V, A, f
- Energy metering values Wp, Wq
- THD (Current & Voltage); Up to 16th Harmonic
- Duty cycle monitoring
- SOE Recorder
- Data Profiler
- Oscillography fault records

Communication Ports

- Front RJ45 & USB engineering port
- RS-232 & RS-485 ports
- Ethernet port, RJ45

Communication Protocol

- Modbus RTU & TCP
- DNP3 Serial & TCP
- IEC 60870-5-101
- IEC 60870-5-104
- SNTP
- IEC 61850 (Optional)

Software

- Agile View

Protection functions

- 50P, Time Overcurrent – Phase
- 50G, Time Overcurrent – Earth, SEF
- 50Q, Time Overcurrent - Neq. Seq
- 51P, Inverse Time Overcurrent – Phase
- 51G, Inverse Time Overcurrent – Earth, SEF
- 51Q, Inverse Time Overcurrent - Neq. Seq
- 59, Overvoltage - Phase or Phase-to-Phase
- 27, Undervoltage - Phase or Phase-to-Phase
- 67P, Directional Inverse Time Overcurrent – Phase
- 67G, Directional Inverse Time Overcurrent - Ground, SEF
- 67Q, Directional Inverse Time Overcurrent - Neg. seq.
- 32, Directional Power
- 50BF, Breaker failure
- 81O, Frequency – Over
- 81U, Frequency – Under
- 79, Auto-recloser Sequence (4 shots)
- 25, Sync Check
- 21, Fault Locator
- Loss of Phase Protection
- Broken conductor protection

6. Outline drawing

NOVAi27 Dimensions:

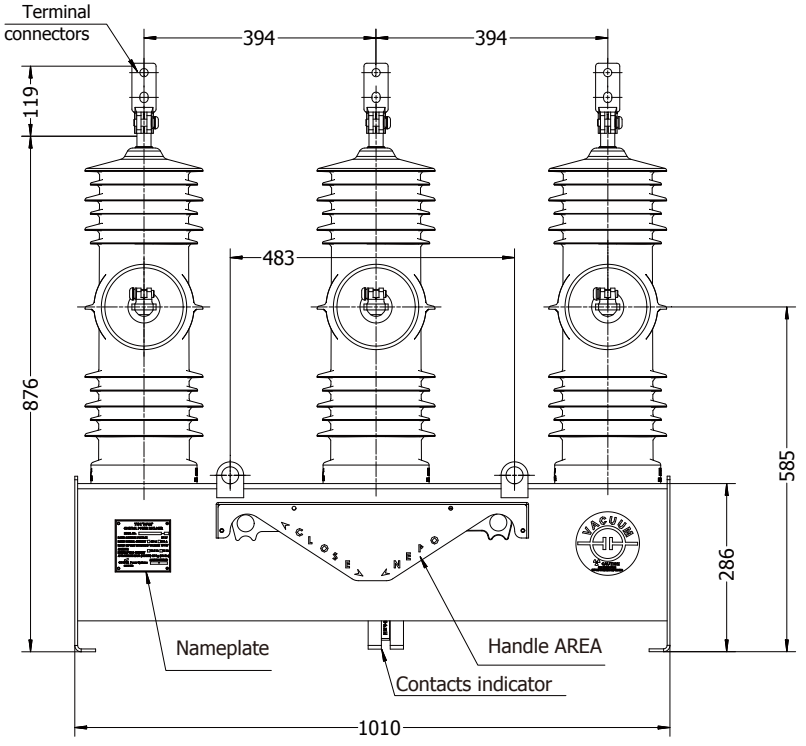

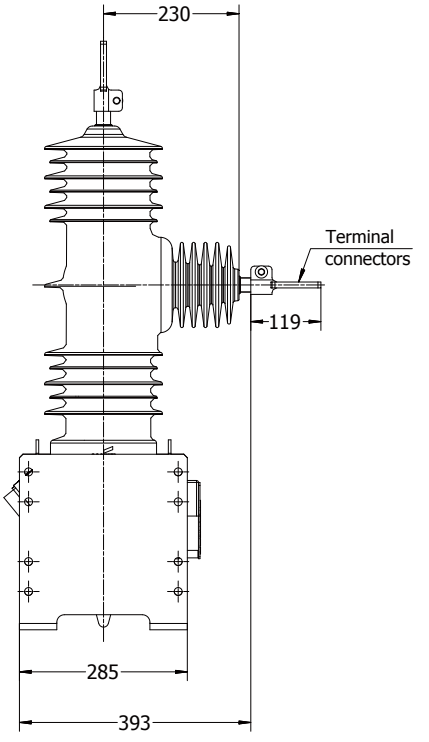

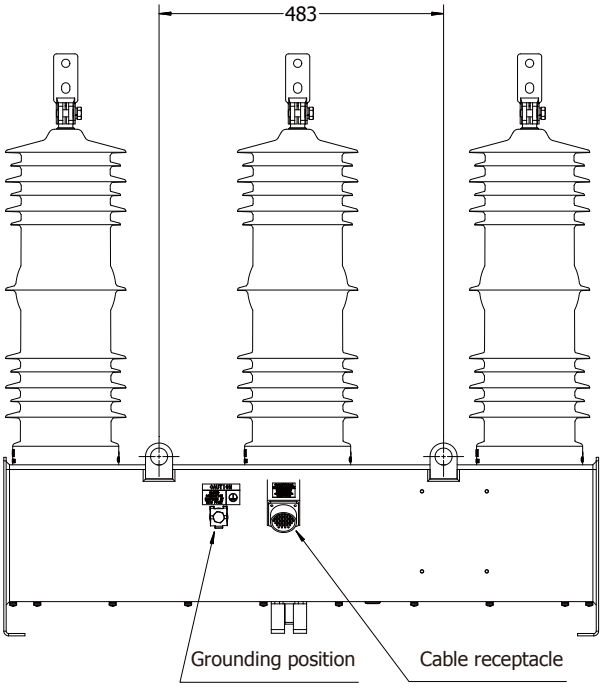

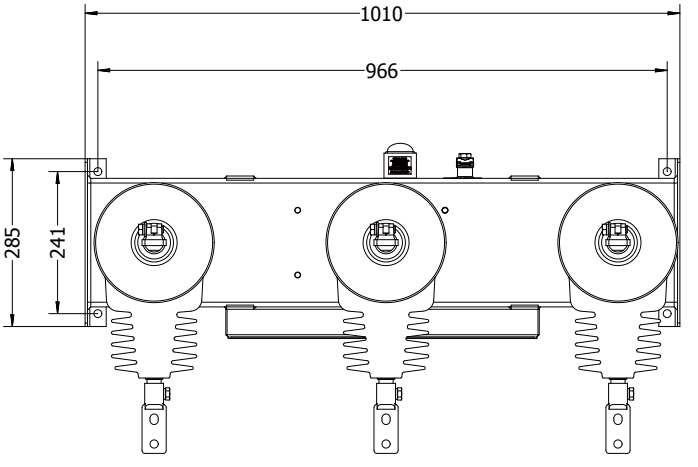

NOVAi38 Dimensions:

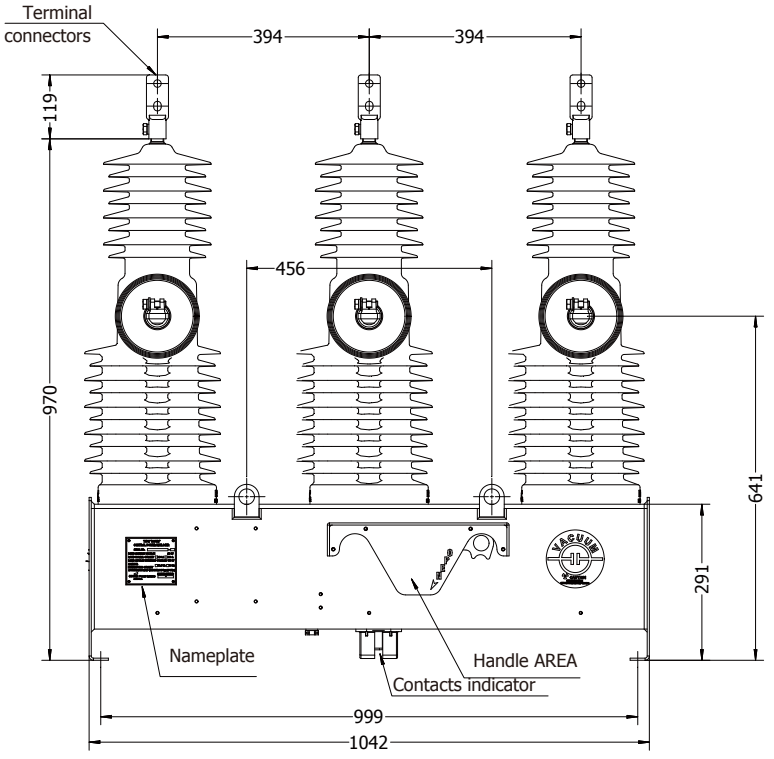

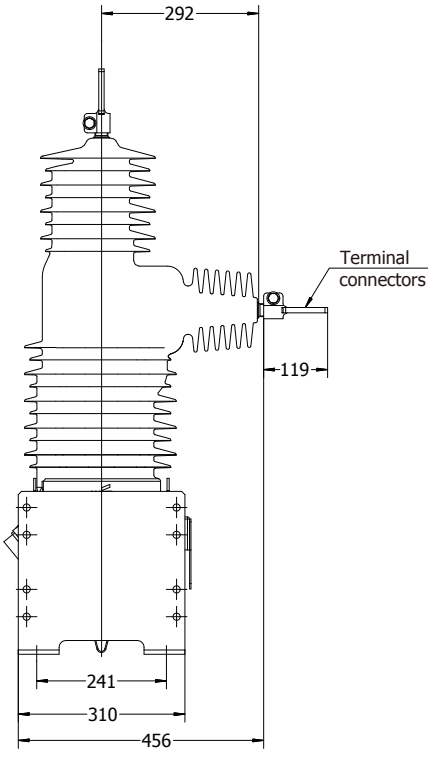

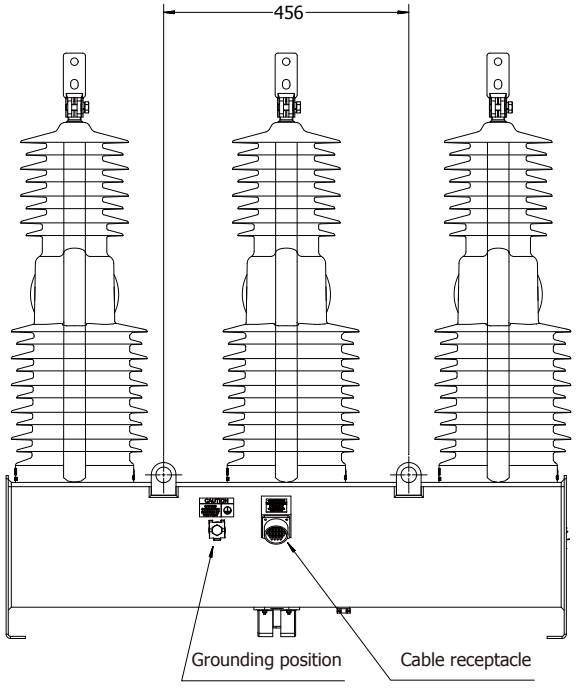

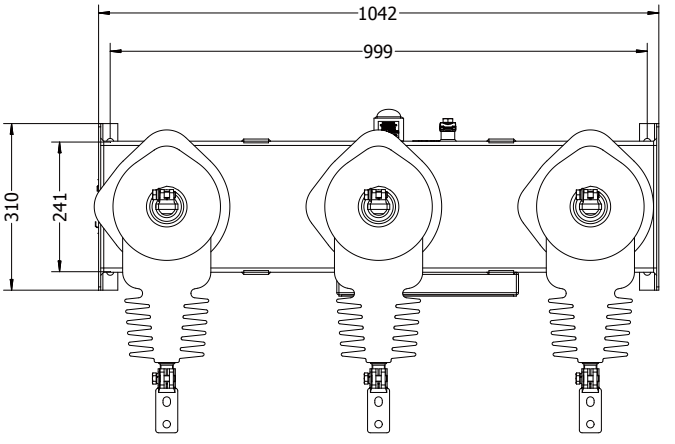

NOVAi, three-phase, six voltage sensors, microprocessor-controlled reclosers (S280-43A)

Outline drawing

FXD Control dimensions:

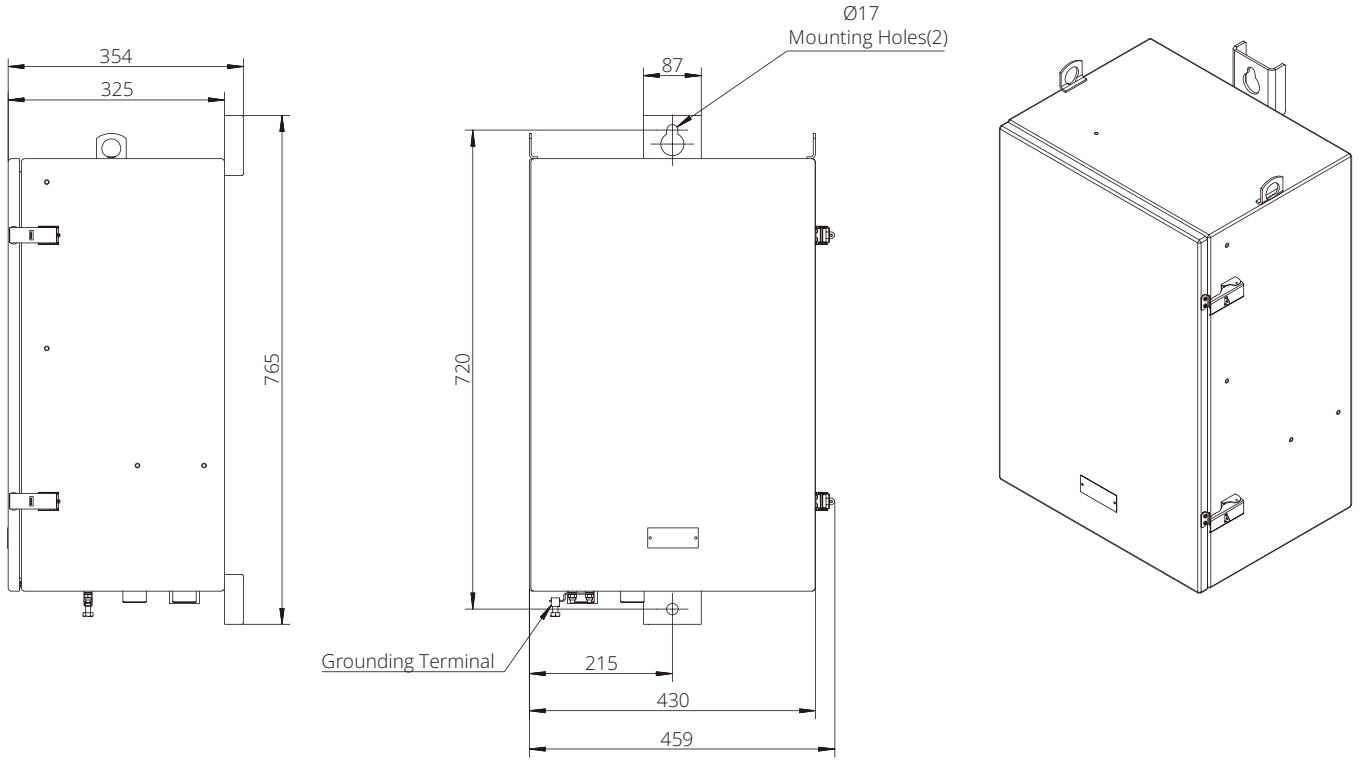

7. ORDERING GUIDE FOR FXD CONTROL

Constructing a catalog number

To order a type NOVAi recloser with 27kV, 16kA interrupting, 800A 4-hole pad terminals, 120V ac heater, six internal voltage sensors, stainless steel housing and with manual closing option, the catalog number would be constructed like this:

2KNOVAi **Basic letters for a NOVAi recloser**

4 **Recloser type:**
4 NOVAi27 for 27 kV, 16 kA interrupting, 150 kV BIL
5 NOVAi38 for 38 kV, 16 kA interrupting, 170 kV BIL

2 **Bushing terminals:**
1 2-hole flat-pad terminal, 630 A max
2 4-hole flat-pad terminal, 800 A max
3 Eyebolt terminal, 800 A 4/0 1000 MCM
4 Eyebolt terminal, 1/0 to 500 MCM, 630 A max

1 **Heater voltage:**
1 120 V ac Heater
2 240 V ac Heater

4 **Voltage sensor:**
2 Three internal voltage sensors for source side per recloser
4 Six internal voltage sensors for both source and load sides per recloser

2 **Housing**
1 Aluminum housing
2 Stainless Steel housing
3 Carbon Steel housing

2 **Manual closing**
1 W/O manual closing
2 W manual closing

2KNOVAi 4 2 1 4 2 2

ORDERING GUIDE FOR FXD AGILE SERIES CONTROL

IFXDA — **Basic Letter for FXD Agile Series Control**

X — **Control Usage Option**
- 1 = 19 Pin for NOVAi Recloser Gen I
- 2 = 37 Pin for NOVAw LBS
- 3 = 12 Pin for NOVAs CB
- 4 = 37 Pin for NOVAi Recloser Gen II

X — **Primarty Power Supply Option**
- 0 = NONE
- 1 = 2 Pin for AC220V
- 2 = 2 Pin for AC110V

X — **Backup Power Supply Option**
- 0 = NONE
- 1 = 8Ah/24VDC Battery
- 2 = 18Ah/24VDC Battery

X — **Cabinet Option**
- 3 = Carbon Steel
- 4 = Stainless Steel

X — **Aux Power Supply Option**
- 1 = 300W Aux Board

X — **Voltage Sensing Option**
- 0 = NONE
- 2 = 3IVS
- 3 = 3IVS+3EVT
- 6 = 6IVS

X — **Comm. Port Option**
- 6 = Standard RS232 + RS485 + 2xRJ45
- 7 = Additional IEC61850
- 8 = Additional IEC61850 with Fiber optic*

X — **Comm. Module Option**
- 0 = NONE
- 1 = 4G Modem

X — **Protocol Option**
- 4 = DNP3.0/IEC60870-5-101/IEC60870-5-104
- 5 = Additional IEC61850

X — **IO Option**
- 4 = 4IN/4OUT
- 5 = 8IN/4OUT

X — **Language Option**
- 1 = English

X — **Packing Option**
- 1 = Paper
- 2 = Wooden

X — **ETO Option**
- 0 = No ETO

IFXDA 4 1 2 4 1 6 6 0 4 5 1 2 0

Eaton is an intelligent power management company dedicated to protecting the environment and improving the quality of life for people everywhere. We make products for the data center, utility, industrial, commercial, machine building, residential, aerospace and mobility markets. We are guided by our commitment to do business right, to operate sustainably and to help our customers manage power — today and well into the future. By capitalizing on the global growth trends of electrification and digitalization, we're accelerating the planet's transition to renewable energy sources, helping to solve the world's most urgent power management challenges, and building a more sustainable society for people today and generations to come.

Eaton was founded in 1911 and has been listed on the New York Stock Exchange for more than a century. We reported revenues of $23.2 billion in 2023 and serve customers in more than 160 countries. Eaton entered the Chinese market in 1993 and has grown significantly since then. In 2004, Eaton moved its Asia-Pacific headquarters from Hong Kong to Shanghai. Today, Eaton has nearly 8,000 employees and 19 manufacturing facilities in China.

For more information about Eaton China, visit **www.eaton.com.cn**
Follow Eaton China WeChat account: **Eaton_China**

Eaton Corporation
No.3, Lane 280, Linhong Road,
Changning District,
Shanghai, China 200335

Cooper Power Systems
No. 955 Shengli Road, Zhangjiang
East High-Tech Zone,
Shanghai, China 201201

© 2025 Eaton Corporation
All Rights Reserved
Printed in China
CA-2021-EN-07 (01-2025)

Eaton is a registered trademark of Eaton Corporation.

All trademarks are property of their respective owners.

Powering Business Worldwide